Skipsutstyr A/S

POLARLIGHT marine lighting systems

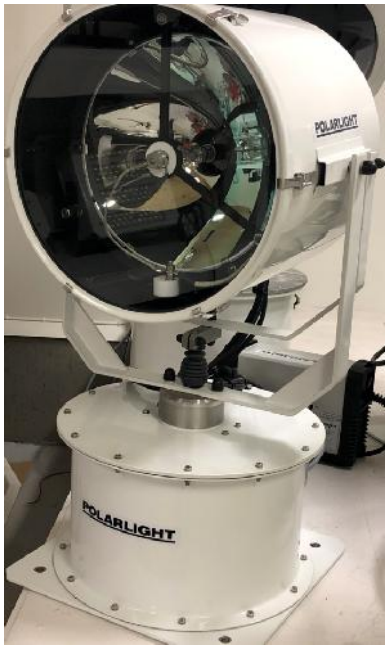

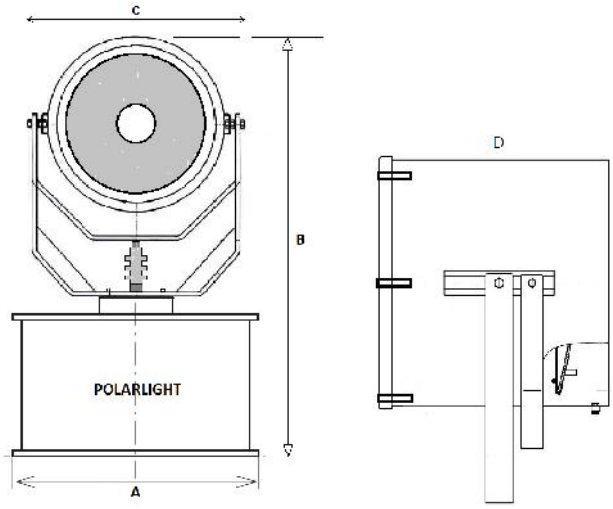

POLARLIGHT Xenon searchlights from **Skipsutstyr A/S** are designed to withstand the toughest conditions at sea. All materials and design solutions are chosen carefully to ensure years of reliable and trouble free operations at sea. Access points to inspection and maintenance tasks are easy accessible. These searchlights are the perfect tool for any vessel requiring extraordinary high light output or sailing in the polar areas.

FEATURES:

-High performance mirror glass reflectors
-Adjustable light beam from control panel
-Strong and powerful motor unit
-Designed for use in polar areas
-Very long range, suitable for detection of ice
-Easy connection, simple for retrofit
-Several control panel solutions available
-Electromagnetic compability (EMC)
-Made of stainless steel 304/316
-Replaceable wear bushings in fork system
-Supplied with PSU and light source

GENERAL:

Xenon searchlight SL460XBO are fit for general use for all kind of ships.
The high quality of the optical system ensures perfect optical performance and a very long range.
The searchlights have thermostatically controlled heating systems in motor unit and searchlight drum, ensuring the unit is always ready to use, even in the coldest winter condition.

The light beam can be adjusted from the searchlight head. (Electrical focus from panel)

TECHNICAL DATA:

	SL460
Lamp:	**230v/1000W Xenon**
Range m/1 lux	**8060 meters**

MEASUREMENTS (mm):

	A	B	C	D
SL460	**460**	**950**	**565**	**430**

MANUFACTURER:

SKIPSUTSTYR A/S
Havnekvartalet 10
8370 Leknes
NORWAY
www.skipsutstyr.com / post@skipsutstyr.com